Optimal Algorithms Theory for Robust Estimation and Prediction

MARIO MILANESE AND ROBERTO TEMPO

Abstract—**This paper deals with the theory of optimal algorithms for problems which cannot be solved exactly. The theory developed allows for the derivation of new and interesting results in parameter estimation and in time series prediction in situations where no reliable statistical hypothesis can be made on the functions and modeling errors involved, but only a bound on them is known. In particular, the derivation of computationally simple optimal algorithms for these two problems is investigated. The practical effectiveness of the algorithms obtained is illustrated by several numerical examples.**

I. Introduction

THE purpose of this paper is to show that the general theory of optimal algorithms, which has been primarily developed in connection with problems of interpolation, differential equations, approximation of functions, integration, and nonlinear optimization [1], [2], can be usefully applied to solve problems in the fields of system parameter identification, and time series prediction. The theory of optimal algorithms is mainly concerned with the approximation of any given transformation S of an unknown problem element x, belonging to a fixed class, through an algorithm A operating on the available information about x. In this context, the information $I(x)$ about x is not exactly known, but only the perturbed information y is given so that the error between the true and the perturbed information is bounded with a suitable norm. The aim is to construct optimal error algorithms, i.e., algorithms whose error is the infimum of the errors of all possible algorithms A, for all possible problem element x's.

Formal definitions and notations are presented in Section II. From Section III on, the paper focuses mainly on linear problems in which S and I are both linear operators. With this restriction, previous results [3], related to the approximation of linear functionals, are extended to linear operators, thereby equipping the involved spaces with appropriate norms. Unfortunately, the linear algorithms found in such a way are often not easily computable in practical problems (see, for example, the computation of the coefficients of the optimal algorithm in [2] and in [3]). Nevertheless, simpler solutions are obtained under conditions which are usually met in important practical problems such as system parameter identification with unknown but bounded errors, as discussed in Section IV.

The problem of parameter identification with unknown but bounded errors has been studied in depth in recent years, and different techniques have been proposed to tackle the problem (duality, functional analysis, min-max theory, etc.) [4]–[10]. However, the results obtained lead to computationally cumbersome algorithms. Recently, real advances have been obtained in the case of linear parameterizations [11]–[13]. Fogel and Huang [13] derived fast algorithms for the recursive evaluation of ellipsoidic bounds to the estimate uncertainty set. The obtained bounds seem to be tight in many practical examples, but the algorithm is not optimal in the above defined sense. Milanese and Belforte [11] have solved the problem of deriving an optimal algorithm in the case of only one fixed problem element x and for the restricted class of correct estimators (see Definition CA in Section IV). The derived algorithm is not recursive but did prove itself to be easily implementable and feasible in all problems where the number of measurements is not too high. With the help of the theoretical developments of the present paper, the results of [11] are extended to a piecewise linear convex set of problem elements and hold without any restriction on the estimator class.

In Section V the problem of prediction of deterministic time series is addressed. In this case, the problem element x is a time-dependent function $x(t)$ and is assumed to belong to a given space X whose structure depends on the *a priori* knowledge on the series. The goal is to predict the value of $x(t)$ at times $\{t_{m+1}, \cdots, t_{m+r}\}$ when the perturbed information is the noisy measurement of m past values of x. The theoretical results of the paper allow the derivation of simple optimal predictors which appear to compare very favorably with some of the most advanced techniques of time series prediction [14]–[18].

II. Definitions and Notations

As stated in Section I, optimal algorithms theory is concerned with the approximation of a known function S of an unknown problem element x, using the knowledge of the set of all possible problem elements and of a certain number of measurements of x, possibly corrupted by noise. Formally, let X be a linear space over the real field and let K be a subset of X, and consider a nonlinear operator S (called the solution operator) such that

$$S : X \to Z$$

where Z is a linear normed space over the real field. In this context S is assumed to be known. The goal is to find, for any $x \in K$, an approximation of $S(x)$ having only limited information about x. More precisely let

$$I : X \to Y$$

be a known nonlinear operator (called the information operator), where Y is a normed linear space over the real field. In our attempt to recover $S(x)$ we do not know $I(x)$, but we actually know the perturbed information $y = I(x) + \rho$ where our knowledge about ρ is that

$$\|I(x) - y\| = \|\rho\| \leqslant \epsilon \tag{1}$$

for a given $\epsilon \geqslant 0$. Let us define the class $\mathcal{A}$ of all permissible algorithms, i.e., the algorithms using a finite number of operations to compute an approximation of $S(x)$. An algorithm A is an operator, not necessarily a linear one, belonging to $\mathcal{A}$ such that

$$A : Y \to Z.$$

A geometric sketch of the whole process is given in Fig. 1

Manuscript received January 31, 1984; revised October 31, 1984. This paper is based on a prior submission of March 22, 1982. Paper recommended by Past Associate Editor, A. S. Willsky. This work was supported in part by the Ministero della Pubblica Istruzione and CENS-CNR.

M. Milanese is with the Dipartimento di Automatica e Informatica, Politecnico di Torino, Torino, Italy.

R. Tempo is with the Centro Elaborazione Numerale dei Segnali, Consiglio Nazionale delle Ricerche, Torino, Italy.

0018-9286/85/0800-0730$01.00 © 1985 IEEE

Authorized licensed use limited to: Texas A M University. Downloaded on December 29,2021 at 21:28:48 UTC from IEEE Xplore. Restrictions apply.

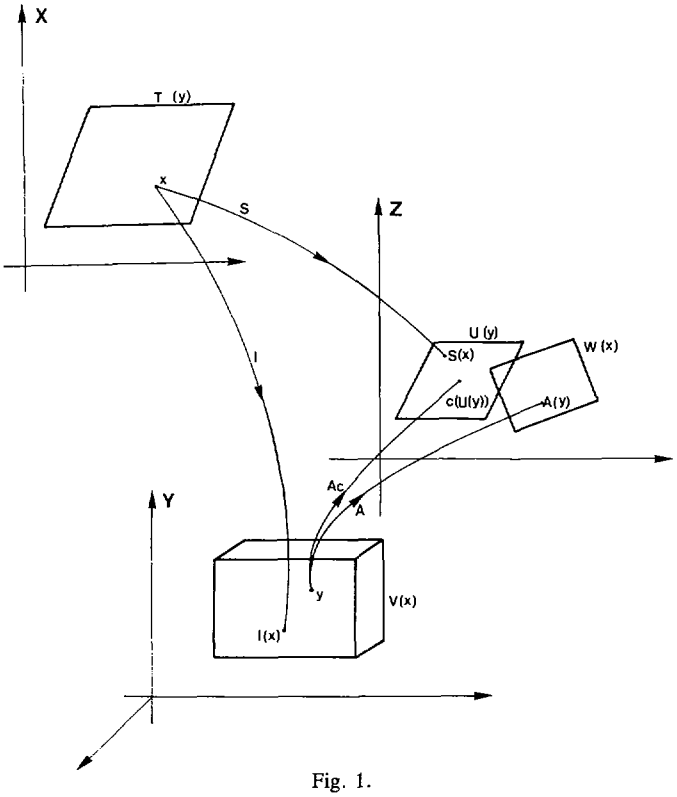

Fig. 1.

where the sets T, U, V, W are defined as follows:

$$T(y)=\{x \in K : \|I(x)-y\| \leqslant \epsilon\} \tag{2}$$

$$V(x)=\{y \in Y : \|I(x)-y\| \leqslant \epsilon\} \tag{3}$$

$$U(y)=S\{T(y)\} \tag{4}$$

$$W(x)=A\{V(x)\}. \tag{5}$$

Let $E(A, \epsilon)$ be the maximum error of the algorithm

$$E(A, \epsilon)=\sup_{x \in K} \sup_{y \in V(x)} \|S(x)-A(y)\| \tag{6}$$

and let $E(\epsilon)$ be the intrinsic error

$$E(\epsilon)=\inf_{A \in \mathcal{A}} E(A, \epsilon). \tag{7}$$

We are interested in solving problems when $E(\epsilon)$ is finite. This is not restrictive in practice; in fact, if the intrinsic error is not finite, the information available on the problem is too poor (for example, if the sets $U(y)$ or $W(x)$ are unbounded).

An algorithm A_o for which

$$E(A_o, \epsilon)=E(\epsilon) \tag{8}$$

is called an optimal error algorithm for the solution S with the information I.

A general class of optimal algorithms that is often used in practical applications is related to the concept of the center of a set.

Given a subset $L \subset Z$, if there exist $c = c(L)$, $c \in Z$, such that

$$\sup_{\tilde{z} \in L} \|c-\tilde{z}\| = \inf_{z \in Z} \sup_{\tilde{z} \in L} \|z-\tilde{z}\| \tag{9}$$

then $c(L)$ is a center of L, according to [1], [19]. The center c can be an element outside L and need not be unique. If we let $c(U(y))$ be a center of the set $U(y)$, then an algorithm for which

$$A_c(y)=c(U(y)) \tag{10}$$

is called a central algorithm. The optimality of central algorithms is given by the following result.

Lemma 1 [2]: Any central algorithm is an optimal error algorithm; that is, if A_c is a central algorithm, then

$$E(A_c, \epsilon)=E(\epsilon). \tag{11}$$

□

It must be remarked that $\sup_{y \in V(x)} \|S(x) - A(y)\|$ cannot be actually calculated since x is not known exactly, but we know only the perturbed information y. On the contrary, it is possible to evaluate $\|S(x) - A(y)\|$. Thus, it appears to be of interest to define a $\sup_{x \in T(y)}$ computable algorithm error as

$$E'(A, \epsilon)=\sup_{y \in Y} \sup_{x \in T(y)} \|S(x)-A(y)\|. \tag{12}$$

The following lemma shows that the definitions (6) and (12) are equivalent.

Lemma 2: For any $A \in \mathcal{A}$ and $\epsilon \geqslant 0$

$$E(A, \epsilon)=E'(A, \epsilon). \tag{13}$$

Proof: See the Appendix.

III. Optimal Estimation for Linear Problems

In the following we will assume that the solution operator S and the information operator I are both linear. Within this condition it is possible to find upper and lower bounds on the intrinsic error $E(\epsilon)$.

Theorem 1 [2]: Let us define

$$e(\epsilon)=\sup_{x \in T(0)} \|Sx\| \tag{14}$$

where $T(0)$ is the set $T(y)$ with $y = 0$.

If K is a balanced[1] convex set, the following inequalities hold:

$$E(\epsilon) \geqslant e(\epsilon). \tag{15}$$

$$E(\epsilon) \leqslant 2e(\epsilon). \tag{16}$$

□

We are interested in looking for easily computable and possibly linear optimal error algorithms and in learning whether or not the lower bound (15) is sharp. In this respect, the first important result is due to Smolyak [20] for the case in which S is a linear functional (that is, Z is one-dimensional) and $\epsilon = 0$, which was then extended to the case in which $\epsilon > 0$ by Marchuk and Oshipenko [3].

Theorem 2 [3]: Let S be a linear functional, I be a linear operator, Y be an m-dimensional linear space, and K be a convex balanced subset of X. Then the following equality holds:

$$E(\epsilon)=e(\epsilon) \tag{17}$$

and an optimal algorithm is the linear one

$$A_o y=\sum_{i=1}^{m} D_i(\epsilon) y_i \tag{18}$$

where the y_i's are the components of the perturbed information y and the D_i's are weighting coefficients. □

Now we obtain conditions allowing for the extension of Theorem 2 when I and S are linear operators mapping into finite dimensional normed spaces.

[1] K is balanced if $x \in K$ implies $-x \in K$.

Authorized licensed use limited to: Texas A M University. Downloaded on December 29,2021 at 21:28:48 UTC from IEEE Xplore. Restrictions apply.

Theorem 3: Let Y and Z be finite dimensional spaces and let A_o be the linear algorithm (rectangular matrix) which has, row by row, the optimal algorithm of each component of Z. (The existence of A_o is guaranteed by Theorem 2.) Let us consider the l_∞^w norm in Z

$$\|z\|_\infty^w = \sup_i |w_i z_i| \tag{19}$$

where w_i are given positive weights and let K be a convex balanced subset of X. Then the following statements are true:

- the following equality holds:

$$E(\epsilon) = e(\epsilon) \tag{20}$$

- A_o is a linear optimal algorithm
- if the optimal algorithm of each component is central, then A_o is a central algorithm.

Proof: See the Appendix.

Remark 1: It should be pointed out that Theorem 3 is not true for any norm in Z. In fact, in [2] and [21] counterexamples have been shown when Z is a Euclidean space equipped with norm l_2 and when Z is a linear space equipped with norm l_4, respectively.

Remark 2: Theorem 3 has been proved in [1] in the case of unperturbed information ($\epsilon = 0$).

Remark 3: It is worth noting that in practical applications we should be able to handle cases when the uncertainty intervals are different for every measurement bound: this motivates the introduction of the l_∞^w norm. In fact, from the definition of the l_∞^w norm we obtain

$$\|Ix - y\|_\infty^w = \|\rho\|_\infty^w = \sup_i |w_i \rho_i|. \tag{21}$$

Since w_i are given positive weights, it follows that

$$|\rho_i| \leqslant \frac{\epsilon}{w_i} = \epsilon_i \qquad i = 1, \cdots, m. \tag{22}$$

In general, the computation of the coefficients $D_i(\epsilon)$ of the optimal error algorithm provided by Theorem 2 can be made by evaluating the following directional derivative (see [2] and [3])

$$\frac{d}{dy} \{ \sup_{x \in T(y)} |Sx| \}_{y=0}. \tag{23}$$

However, in most cases the evaluation of (23) is not an easy task and the actual solutions for particular problems of interest usually need further specific and deep investigation (see the examples reported in [1] and [2]).

The primary objective of this paper is to show that there exists a class of problems (satisfying Condition LP defined below) for which optimal algorithms can be easily computed and used. Of even more significance, this class of problems is sufficiently wide to include problems of system parameter identification and time series prediction.

Condition LP (Linear Programming): Let X, Y, Z be n, m, and r-dimensional spaces, respectively. Moreover, let Z and Y be equipped with l_∞ and l_∞^w norms, respectively, and let K be a piecewise linear convex subset of X.

Lemma 3: Let Condition LP hold with $r = 1$ and let K be a balanced set. Then the computation of the intrinsic error

$$E(\epsilon) = \sup_{x \in T(0)} |Sx| \tag{24}$$

is a linear programming problem.

Proof: Let us consider the l_∞^w norm in Y: this implies that

$$|(Ix)_i| \leqslant \frac{\epsilon}{w_i} = \epsilon_i \qquad i = 1, \cdots, m. \tag{25}$$

Relation (25) represents a set of $2m$ linear inequalities defining a piecewise linear convex balanced set whose intersection with K is $T(0)$ which then results in a piecewise linear balanced convex set.

Since $T(0)$ is balanced, the objective function Sx is linear

$$\sup_{x \in T(0)} |Sx| = \sup_{x \in T(0)} (Sx). \tag{26}$$

Thus, (24) results in the maximization of the linear functional Sx over a piecewise linear convex set. □

The interest of Lemma 3 lies in the fact that by employing a linear programming procedure we obtain the active constraints of the problem. These constraints can be used to compute the coefficients of the optimal linear algorithm (18) when $K = X$ and $m \geqslant n$.

Let Condition LP hold with $K = X$ and $r = 1$. Then the relation $x \in T(0)$ is equivalent to the set of inequalities

$$|(Ix)_i| \leqslant \epsilon_i \qquad i = 1, \cdots, m. \tag{27}$$

Let $a_1, a_2, \cdots, a_n$ be the values of i, for which the solution of (24) gives equalities in the constraints (27) (called active constraints).

The restricted space $\bar{Y}$ is an n-dimensional subspace of Y containing elements $\bar{y}$ such that

$$\bar{y}_i = y_{a_i}, \qquad i = 1, \cdots, n, \ \forall y \in Y. \tag{28}$$

The restricted operator $\bar{I}$ is a mapping

$$\bar{I} : X \to \bar{Y}$$

such that

$$\bar{I}x = \overline{(Ix)} \ \forall x \in X. \tag{29}$$

Theorem 4: Let Condition LP hold with $K = X$, $r = 1$, and $m \geqslant n$. Then

- if $\bar{I}$ is a nonsingular operator a linear optimal error algorithm A_o is given by

$$A_o y = \sum_{i=1}^{m} D_i y_i$$

with

$$\begin{aligned} D_i &= 0 \qquad \text{if } i \neq a_j \\ & \qquad\qquad\qquad i = 1, \cdots, m;\ j = 1, \cdots n, \\ D_i &= (S\bar{I}^{-1})_j \quad \text{if } i = a_j \end{aligned} \tag{30}$$

where $(S\bar{I}^{-1})_j$ is the jth component of the vector $S\bar{I}^{-1}$,

- the intrinsic error is given by

$$E(\epsilon) = \sup_{x \in T(0)} Sx. \tag{31}$$

Proof: See the Appendix.

Remark 4: Using Theorem 4 the optimal error algorithm can be computed with a simple linear programming algorithm.

Note that the nonsingularity of $\bar{I}$ implies that rank $(I) = n$. This is similar to classical identifiability condition in the field of estimation and system identification [22]–[24]. In fact, if rank $(I) < n$, the intrinsic error is not finite.

The use of Theorem 3 allows the extension of Theorem 4 when S is a linear operator mapping into finite dimensional linear space.

Theorem 5: Let Condition LP hold with $K = X$ and $m \geqslant n$. Then the following two statements are true.

- The linear algorithm [rectangular matrix ($r \times m$)], having row by row optimal solutions for each component of Sx, obtained by the linear programming algorithm of Theorem 4, is an optimal algorithm.

Authorized licensed use limited to: Texas A M University. Downloaded on December 29,2021 at 21:28:48 UTC from IEEE Xplore. Restrictions apply.

- The intrinsic error is given by

$$E(\epsilon) = \sup_i \sup_{x \in T(0)} (Sx)_i. \tag{32}$$

Proof: The linear algorithm A_o can be constructed row by row using Theorem 4; moreover, Theorem 3 guarantees that A_o is an optimal error algorithm. Since Theorem 3 shows that the inequality (15) is sharp, then

$$E_i(\epsilon) = \sup_{x \in T(0)} |(Sx)_i| = \sup_{x \in T(0)} (Sx)_i \tag{33}$$

where $E_i(\epsilon)$ is the intrinsic error of the ith component. Then

$$E(\epsilon) = \sup_i E_i(\epsilon). \tag{34}$$

Remark 5: The computation of the optimal algorithm given by Theorem 5 can be performed by solving r linear programming problems of type (31).

Theorems 4 and 5 provide an optimal algorithm when $K = X$ and $m \geqslant n$. In those cases no *a priori* information about the problem elements was assumed available (or used), and the only information is provided by a sufficiently large number of measurements ($m \geqslant n$). The next theorem allows us to derive an optimal algorithm without this restriction.

Theorem 6: Let Condition *LP* hold. Then

- an optimal central algorithm A_o is defined by

$$(A_o(y))_i = \frac{1}{2}\{\sup_{x \in T(y)} (Sx)_i + \inf_{x \in T(y)} (Sx)_i\} \quad i = 1, \cdots, r \ \forall\, y \in Y \tag{35}$$

- if K is balanced the intrinsic error is given by

$$E(\epsilon) = \sup_i \sup_{x \in T(0)} (Sx)_i. \tag{36}$$

Proof: Clearly

$$\frac{1}{2}\{\sup_{x \in T(y)} (Sx)_i + \inf_{x \in T(y)} (Sx)_i\} = c_i(U(y)) \ \forall\, y \in Y \tag{37}$$

where c_i is the center of the ith component; then from Theorem 3 and Lemma 1 it follows that the algorithm A_o is central and optimal. In fact, the linear programming algorithm (35) is central for every component, and then we obtain from Theorem 3 that it is also optimal.

Since $T(0)$ is a balanced set and S is linear, the intrinsic error for every component $E_i(\epsilon)$ is given by

$$E_i(\epsilon) = \sup_{x \in T(0)} (Sx)_i. \tag{38}$$

IV. System Parameter Estimation with Unknown but Bounded Errors

In this section we shall consider the application of the previous theory to system parameter estimation when a statistical approach is not suitable but only some bounds on the measurement errors are known. This approach is certainly of great interest in many areas of application ([4], [6], [7], [10], [12]), but only recently have some easily applicable results been developed [11], [13].

Consider $x = x(t, \lambda)$ as the input–output pair of a dynamic system with some unknown parameter vector $\lambda \in R^r$. If λ is given, $x(t, \lambda)$ is completely known and the goal is to recover λ having some information about $x(t, \lambda)$. Then the solution operator S is defined by

$$S(x) = \lambda. \tag{39}$$

Since the theoretical results of previous sections hold if the solution operator S is a linear one, then they can be applied only in case of linear parameterizations of the dynamic models used for system identification. Note that the linearity of S is not related to the linearity of the dynamic model used and nonlinear models can give linear parameterizations and vice versa [22]. Although some important practical problems can be developed under this restriction (see Example 1 and Remark 6) the linearity hypothesis of S may be a major limitation. As it happens in statistical estimation theory, a complete solution for the general nonlinear case may be in general practically infeasible, so that linearization techniques might represent a useful methodology for obtaining approximate solutions [25].

The information on $x(t, \lambda)$ usually consists of a set of measurements, for $t = t_1, \cdots, t_m$, so that I is the linear operator defined by

$$Ix = \{x(t_1), \cdots, x(t_m)\}. \tag{40}$$

Since in general we have more measurement samples than parameters to be estimated we can suppose $m \geqslant r$.

A complete solution to the parameter estimation problem with unknown but bounded errors is obtained by applying Theorem 5 or 6, with the following identification: Y is the m-dimensional space of the perturbed measurements, equipped with l_∞^w norm; Z is the r-dimensional space of all λ, equipped with l_∞ norm; X is the space of all input–output pairs $x(t, \lambda)$ with unknown parameters λ ranging on R^r. The dimension of this space is r if the vector $\lambda \in R^r$ is identifiable., i.e., if S, given by (39), is an invertible mapping [24]. The information operator I is given by (40). If no constraint on λ is given, then $K = X$ and Theorem 5 can be used. If some constraints on λ are known (for example, $\lambda_i \geqslant 0$, $i = 1, \cdots, r$), then Theorem 6 should be used.

In more standard terminology Theorems 5 or 6 provide a solution to the problem of finding an estimator which minimizes the maximum (over all λ) of the uncertainty intervals of the estimates. Some interesting features of this solution and their connection with recent results on a simpler but related problem are discussed.

Milanese and Belforte [11] have studied the local problem of determining the MUICE (minimum uncertainty interval correct estimator) which is defined as A^* such that for a given $x(t, \lambda)$

$$\inf_{A \in \mathfrak{A}_c} \sup_{y \in V(x)} |(\lambda - Ay)_i| = \sup_{y \in V(x)} |(\lambda - A^*y)_i| \quad i = 1, \cdots, r \tag{41}$$

where $\mathfrak{A}_c \subset \mathfrak{A}$ is the class of correct algorithms defined as follows.

Definition CA (Correct Algorithm): An algorithm A is correct if

$$A(Ix) = S(x) \qquad \forall\, x \in X. \tag{42}$$

It should be noted that the concept of a correct estimator is meaningful only if, as supposed in the present section, $m \geqslant r$. In this case correct estimators are interesting for two main reasons: first, any estimator that minimizes a functional of $(y - Ix)$ is correct (for example, least square estimators); second, they are the analog of unbiased estimators in a statistical setting.

With the aid of Theorem 5, we are able to solve the global problem

$$\inf_{A \in \mathfrak{A}} \sup_{x \in X} \sup_{y \in V(x)} |(\lambda - Ay)_i| = \sup_{x \in X} \sup_{y \in V(x)} |(\lambda - A_o y)_i| \quad i = 1, \cdots, r. \tag{43}$$

It results that the MUICE A^* found in [11] is just the optimal algorithm A_o given by Theorem 5; that is, $A^* = A_o$. This is not an accident but a consequence of the correctness of A_o given by Theorem 5 [correctness can be easily verified from (30)]. In fact, the following general result holds for correct algorithms.

Authorized licensed use limited to: Texas A M University. Downloaded on December 29,2021 at 21:28:48 UTC from IEEE Xplore. Restrictions apply.

Theorem 7: If S, I, and A are linear and if A is correct, then

$$\sup_{y \in V(x)} \|Sx - Ay\| = \epsilon \|A\| = E(A, \epsilon), \qquad \forall x \in X, \tag{44}$$

$$\sup_{x \in T(y)} \|Sx - Ay\| \leqslant \epsilon \|A\| = E(A, \epsilon) \qquad \forall y \in Y, \tag{45}$$

where $\|A\|$ is the operator norm induced by the norms of Y and Z.

Proof: From the definition of correctness of A it follows that

$$\|Sx - Ay\| = \|Sx - AIx - A\rho\| = \|A\rho\|. \tag{46}$$

Then from the definitions of $V(x)$ and $T(y)$ and (46) it follows that

$$\sup_{y \in V(x)} \|Sx - Ay\| = \sup_{\|\rho\| \leqslant \epsilon} \|A\rho\| = \epsilon \|A\| \ \forall x \in X \tag{47}$$

$$\sup_{x \in T(y)} \|Sx - Ay\| \leqslant \sup_{\|\rho\| \leqslant \epsilon} \|A\rho\| = \epsilon \|A\| \ \forall y \in Y. \tag{48}$$

Moreover, from (6) we have

$$E(A, \epsilon) = \sup_{x \in X} \sup_{y \in V(x)} \|Sx - Ay\| = \sup_{x \in X} \epsilon \|A\| = \epsilon \|A\|. \tag{49}$$

□

From Theorem 7 it follows that, if a linear optimal algorithm A_o is correct, then it is also locally optimal

$$\inf_{A \in \mathcal{A}} \sup_{y \in V(x)} \|Sx - Ay\| = \sup_{y \in V(x)} \|Sx - A_o y\| \qquad \forall x \in X. \tag{50}$$

Note that local optimality is a much stronger property than optimality and the only other general class of optimal algorithms known to enjoy this property is the class of central algorithms [1], [19].

In conclusion, by means of the approach of the present paper, the MUICE A^* [solution of (41)] derived in [11] is shown also to be the solution of a more general problem [given by (43)] and its optimality is proved without restriction to the class of correct algorithms. This in particular means that, unlike the statistical case, no improvement can be obtained by looking for noncorrect estimators.

Remark 6: An important case falling within the class of problems which can be solved by optimal algorithm theory is the classical one of estimating the state of a linear dynamic system from perturbed measurements of an input–output pair. In this case the previous theoretical results can be applied to provide the minimum state estimation error.

Example 1: The use of optimal algorithms may give significant improvements with respect to commonly used estimators. As a very simple example, let us consider the following parameter estimation problem:

$$x(t, \lambda) = \lambda_1 u(t - 2\Delta t) + \lambda_2 u(t - \Delta t) + \lambda_3 u(t) \tag{51}$$

where u is a known function. In this case I is given by

$$Ix = \{x(\Delta t), \cdots, x(50\Delta t)\} \tag{52}$$

and the noise samples are assumed to be bounded by relative errors

$$\epsilon_i = 0.02|y(i\Delta t)| \qquad i = 1, \cdots, 50. \tag{53}$$

Let A_w be the weighted least square estimator of λ minimizing the Euclidean norm of the estimation error with weights ϵ_i^{-2}. (A_w is perhaps the most widely estimator used in practical applications.)

In this case, if the maximum error (l_∞ norm) is of interest, A_o given by (35) allows an error reduction of 50 percent with respect to A_w; in fact, the following errors have been computed:

$$E(A_w, \epsilon) = 0.12$$

$$E(\epsilon) = E(A_o, \epsilon) = 0.06.$$

V. Deterministic Time Series Prediction

Multistep ahead time series prediction is the estimation of future values of an unknown function $x(t)$ at fixed times ahead based upon the observed samples available during a previous time interval. Moreover, certain *a priori* hypotheses and information about the process are assumed given; typically, the function is supposed to be the realization of a stochastic process with (partially) known probability density functions. However, in some practical applications, it is difficult to make reliable statistical hypotheses for the process; in this case, the theoretical developments previously described give interesting results and can be very useful in time series prediction. In fact, the unknown but bounded approach can be used when the number of available measurements are limited and/or the statistical information about the process is not reliable.

In the present case the goal is to predict the value of $x = x(t)$ at times $\{t_{m+1}, \cdots, t_{m+r}\}$ from measurements of past values $\{x(t_1), \cdots, x(t_m)\}$ so that the solution and information operators are defined by

$$S(x) = \{x(t_{m+1}), \cdots, x(t_{m+r})\}, \tag{54}$$

$$I(x) = \{x(t_1), \cdots, x(t_m)\} \tag{55}$$

where

$$t_1 < t_2 \cdots < t_m < t_{m+1} < \cdots < t_{m+r}.$$

The measurements are assumed to be affected by unknown but bounded errors such that

$$\|y - Ix\|_\infty^w \leqslant \epsilon. \tag{56}$$

The theory of previous sections can be applied by making the following identifications. X is a space of real functions of time $x(t)$, and K is a subset of X, both suitably defined to use possible *a priori* information on $x(t)$ (for example, X can be the space of real continuous functions, of differentiable functions, of band-limited real functions), Z is an r-dimensional linear space equipped with l_∞ norm, Y is an m-dimensional linear space equipped with l_∞^w norm to satisfy (56), S and I are given by (54) and (55) and are clearly linear.

In this context an algorithm A, also called a predictor, is any map applied to the perturbed samples y which predicts the values $\{x(t_{m+1}), \cdots, x(t_{m+r})\}$, i.e.,

$$A(y) = \{\hat{x}(t_{m+1}), \cdots, \hat{x}(t_{m+r})\}. \tag{57}$$

The previous results can be used in looking for a min–max predictor, that is for a predictor minimizing the maximum of all prediction errors compatible with the available information

$$E(\epsilon) = \inf_{A \in \mathcal{A}} \sup_{x \in K} \sup_{y \in V(x)} \max_j |x(t_{m+j}) - \hat{x}(t_{m+j})|. \tag{58}$$

Theorem 3 gives the solution to this problem indicating that the min–max predictor is the linear algorithm

$$x(t_{m+j}) = \sum_{i=1}^{m} D_{ij}(\epsilon, t_{m+j}) y(t_i) \qquad j = 1, \cdots, r. \tag{59}$$

As pointed out previously the computation of the D_{ij}'s is not always an easy task, unless Condition LP holds.

Remark 7: Classical examples for which the D_{ij}'s are known are related to the case of X being the class $W^g(a, b)$ of real functions with continuous derivative of order g on the interval (a, b), and K the subset of functions with bounded gth derivative. If g

Authorized licensed use limited to: Texas A M University. Downloaded on December 29,2021 at 21:28:48 UTC from IEEE Xplore. Restrictions apply.

$= m$ (number of measurements) then the Lagrange interpolation formula is an optimal algorithm [3]. If $g < m$ an optimal algorithm can be obtained by perfect splines algorithms [2], [21].

However, attention should be paid in applying these or similar results in time series prediction: for example it is widely recognized that the Lagrange interpolation formula may be a very poor predictor. In fact, the proper choice of X and K (in order to imbed in the formulation of the problem the maximum *a priori* information available on the time series considered) may have a significant impact on the actual performance of the optimal predictor. The discussion of this problem, which has some analogy with the problem of choosing a specific class of models in statistical time series prediction [26], is beyond the scope of this paper, but a real data example is now presented, demonstrating that very interesting results can be obtained, even for simple choices of X and K. For further developments and examples, see [27], [28].

Example 2: Let us consider the well-known Wolfer sunspot numbers [29]. Several linear and nonlinear time series models have been fitted to these data, sometimes by restricting attention to the period 1770–1869. We use this restricted example for ease of comparison.

For the sake of forecasting the sunspot numbers Box and Jenkins proposed an autoregressive model of order 2 (model BJ1) and one of order 3 (BJ2) [14], Kashyap and Rao [15] found it useful to add autoregressive terms with lead time of 10 years (model KR). Recent statistical tests have suggested that this time series may be highly nonlinear [16]. Two recent nonlinear models are considered for the comparison: the bilinear model of Granger and Andersen [17] (model GA) and a threshold autoregressive model proposed by Tong and Lim [18] (model TL).

In order to apply the optimal algorithm approach, the cyclical nature of the time series suggested choosing X as a finite subspace of the Fourier series. A preliminary Fourier analysis has been made to find the most relevant harmonics and the following X, of dimension five, has been used

$$X=\left\{x(t) : x(t)=a_o+a_1 \sin\left(\frac{2\pi}{12}t+\varphi_1\right) + a_2 \sin\left(\frac{2\pi}{6}t+\varphi_2\right)\right\}. \tag{60}$$

For the sake of simplicity no effort has been made in trying to acquire information on possible ranges of the unknown parameters a_i, φ_i, so that $K = X$.

As information for the one step ahead prediction ($r = 1$) only the previous eleven sunspot numbers are used (about one mean cycle period) so that dim $Y = 11$. Moreover, Y is equipped with a l_∞^w norm with weights

$$w_i=\frac{1}{\epsilon_a+\epsilon_r y_i}. \tag{61}$$

Under such assumptions Condition LP holds and Theorem 6 has been used to derive an optimal error predictor.

The values of ϵ_a and ϵ_r have been obtained by analyzing the data of the period 1770–1869, and they are chosen as

$$\epsilon_a=0.0 \quad \epsilon_r=0.3.$$

The performances of the resulting optimal error predictor (OEP) and of the previously discussed models have been evaluated and compared. The test was made on the period 1870–1892 (two sunspot cycles). Both the mean square (MSE) and the maximum (MAXE) one step ahead prediction errors are reported in Table I.

It can be seen that OEP compares very well with the best methods available for one step ahead prediction. Even more favorable is the comparison in the case of multistep ahead prediction ($r > 1$). This is not surprising, since in a statistical context the derivation of optimal multistep ahead predictors taking into account the interaction of fitting and prediction is still an open problem (even for linear models). All previous methods are used to predict the data on the period 1870–1882 (one sunspot cycle) using only the data until 1869 (in this case $r = 13$) and both the mean square (MSE) and the maximum (MAXE) of the errors between the predicted and true values have been computed. The results are reported in Table II.

TABLE I
ONE STEP AHEAD PREDICTION ERRORS OVER THE TESTING PERIOD 1870–1892

	OEP	BJ1	BJ2	KR	GA	TL
MSE	265	326	401	277	276	261
MAXE	39	47	51	46	46	44

TABLE II
MULTISTEP AHEAD ($r = 13$) PREDICTION ERRORS OVER THE TESTING PERIOD 1870–1882

	OEP	BJ1	BJ2	KR	GA	TL
MSE	401	568	787	516	519	1053
MAXE	41	47	48	46	44	66

Even better results have been obtained by considering X as the space of mixed regressive and harmonic functions (see [27], [28] for further details and numerical results).

VI. Conclusions

This paper has investigated the application of the general theory of optimal algorithms to problems of estimation and prediction. The theory developed here gives complete and easy to implement solutions to optimal estimation for linear parameterizations. These results represent a significant extension and generalization of the available methods of system parameter estimation in the presence of unknown but bounded descriptions of uncertainty.

In deterministic time series prediction, we are able to compute simple optimal predictors which seem to be competitive with some of the most advanced available techniques. In particular, the optimal algorithm approach avoids the usual two step procedure (model fitting and prediction with the fitted model) whose interaction causes great theoretical and computational difficulties for nonlinear models or for multistep prediction.

Moreover, the estimators and predictors obtained have further interesting theoretical features. In fact, most of the methods available in the literature are not specifically designed to be robust in the presence of modeling errors, nonlinearities, unmodeled dynamics, and parameter changes which play a significant role when real problems must be faced. In the optimal algorithm approach, most of these aspects can be appropriately taken into account.

Although the theory developed here covers interesting applications, many open problems remain. The recursive implementation of the optimal algorithms and the search for nearly optimal algorithms for nonlinear problems are perhaps among the most interesting.

Appendix

Proof of Lemma 2: We define the Cartesian product $K \cdot Y$ of K and Y to be the set of pairs of vectors (x, y) with x in K and y in Y.

Authorized licensed use limited to: Texas A M University. Downloaded on December 29,2021 at 21:28:48 UTC from IEEE Xplore. Restrictions apply.

Definition (6) can be rewritten as

$$E(A, \epsilon) = \sup_{x \in K} \sup_{y \in V(x)} \|S(x) - A(y)\| = \sup_{(x, y) \in K \cdot V(x)} \|S(x) - A(y)\|. \quad \text{(A-1)}$$

Moreover, let us observe that

$$\begin{aligned}\{(x, y) \in K \cdot V(x)\} &= \{(x, y) \in K \cdot Y : y \in V(x)\} \\ &= \{(x, y) \in K \cdot Y : \|I(x) - y\| \leqslant \epsilon\} \\ &= \{(x, y) \in X \cdot Y : x \in T(y)\} \\ &= \{(y, x) \in Y \cdot T(y)\}. \end{aligned} \quad \text{(A-2)}$$

Since

$$E'(A, \epsilon) = \sup_{y \in Y} \sup_{x \in T(y)} \|S(x) - A(y)\| = \sup_{(y, x) \in Y \cdot T(y)} \|S(x) - A(y)\|. \quad \text{(A-3)}$$

and the lemma is proved by comparing (A-1) and (A-13), using (A-2).

Proof of Theorem 3: Using the relation (16) for every component i in Z and since w_i are arbitrary weights, the following relation holds:

$$\inf_{A \in \mathcal{A}} \sup_{x \in K} \sup_{y \in V(x)} |w_i(Sx - Ay)_i| = \sup_{x \in T(0)} |w_i(Sx)_i| \quad \text{(A-4)}$$

and

$$\sup_i \inf_{A \in \mathcal{A}} \sup_{x \in K} \sup_{y \in V(x)} |w_i(Sx - Ay)_i| = \sup_i \sup_{x \in T(0)} |w_i(Sx)_i|. \quad \text{(A-5)}$$

Let $E_i(A, \epsilon)$ be the maximum error of the algorithm for the component i

$$E_i(A, \epsilon) = \sup_{x \in K} \sup_{y \in V(x)} |w_i(Sx - Ay)_i|. \quad \text{(A-6)}$$

From (A-5) and (18)

$$\sup_i \inf_{A \in \mathcal{A}} E_i(A, \epsilon) = \sup_{x \in T(0)} \|Sx\|_\infty^w \leqslant \inf_{A \in \mathcal{A}} \sup_i E_i(A, \epsilon). \quad \text{(A-7)}$$

Now we prove that $E_i(A, \epsilon)$ has a saddle point; that is,

$$\sup_i \inf_{A \in \mathcal{A}} E_i(A, \epsilon) = \inf_{A \in \mathcal{A}} \sup_i E_i(A, \epsilon). \quad \text{(A-8)}$$

Let us define

$$E_s(A_o, \epsilon) = \sup_i E_i(A_o, \epsilon) \quad \text{(A-9)}$$

and since the optimal error algorithm is optimal for every ith component

$$E_i(A_o, \epsilon) = \inf_{A \in \mathcal{A}} E_i(A, \epsilon) \qquad i = 1, \cdots, r. \quad \text{(A-10)}$$

From (A-9)

$$E_s(A_o, \epsilon) \geqslant E_i(A_o, \epsilon). \quad \text{(A-11)}$$

And, since i in (A-10) is arbitrary,

$$E_s(A_o, \epsilon) \leqslant E_s(A, \epsilon). \quad \text{(A-12)}$$

These are the standard conditions in order to have a saddle point for $E_i(A, \epsilon)$ [30]. Then

$$\sup_{x \in T(0)} \|Sx\|_\infty^w = \inf_{A \in \mathcal{A}} \sup_{x \in K} \sup_{y \in V(x)} \|Sx - Ay\|_\infty^w. \quad \text{(A-13)}$$

Thus, the inequality (14) is sharp and A_o is a linear optimal algorithm.

Let us suppose that the optimal algorithm of each component is central.

From definition (9) for every component in Z we obtain

$$\sup_{\tilde{x} \in T(y)} |w_i(c - S\tilde{x})_i| = \inf_{z \in Z} \sup_{\tilde{x} \in T(y)} |w_i(z - S\tilde{x})_i| \quad i = 1, \cdots, r \quad \text{(A-14)}$$

where c is the same for every component

$$\sup_i \sup_{\tilde{x} \in T(y)} |w_i(c - S\tilde{x})_i| = \sup_i \inf_{z \in Z} \sup_{\tilde{x} \in T(y)} |w_i(z - S\tilde{x})_i|. \quad \text{(A-15)}$$

Now we show that

$$\sup_i \sup_{\tilde{x} \in T(y)} |w_i(c - S\tilde{x})_i| = \inf_{z \in Z} \sup_i \sup_{\tilde{x} \in T(y)} |w_i(z - S\tilde{x})_i|. \quad \text{(A-16)}$$

Let us impose

$$\sup_{\tilde{x} \in T(y)} |w_i(z - S\tilde{x})_i| = f_i(z) \qquad i = 1, \cdots, r \quad \text{(A-17)}$$

$$\inf_{z \in Z} f_i(z) = f_i(z_o) \qquad i = 1, \cdots, r \quad \text{(A-18)}$$

$$\sup_i f_i(z_o) = f_s(z_o). \quad \text{(A-19)}$$

From (A-18) and (A-19), we obtain

$$f_i(z_o) \leqslant f_s(z_o) \leqslant f_s(z). \quad \text{(A-20)}$$

Since, for definition of c (A-14), c is independent of i and

$$z_o = c. \quad \text{(A-21)}$$

Again (A-20) is the standard saddle point condition implying that (A-16) holds, so that

$$\sup_{\tilde{x} \in T(y)} \|c - S\tilde{x}\|_\infty^w = \inf_{z \in Z} \sup_{\tilde{x} \in T(y)} \|z - S\tilde{x}\|_\infty^w. \quad \text{(A-22)}$$

Thus, c is a center of $U(y)$ and A_o is a central algorithm.

Proof of Theorem 4: Let us define the following set

$$V(\tilde{y}) = \{y \in Y : |\tilde{y} - y| \leq \epsilon\} \cap R(I) \quad \text{(A-23)}$$

where $R(I)$ is the range of the operator I and $\tilde{y}$ is a perturbed information.

Let $y_c = y_c(\tilde{y})$ be the center of the set $V(\tilde{y})$, according to definition (9).

Let us define the set $V(y_c)$

$$V(y_c) = \{y \in Y : |y_c - y| \leqslant \epsilon\} \cap R(I). \quad \text{(A-24)}$$

Let $T(\tilde{y})$ and $T(y_c)$ be the inverse image of $V(\tilde{y})$ and $V(y_c)$ under I, respectively, defined as

$$T(\tilde{y}) = \{x \in X : I(x) \in V(\tilde{y})\} \quad \text{(A-25)}$$

$$T(y_c) = \{x \in X : I(x) \in V(y_c)\}. \quad \text{(A-26)}$$

Authorized licensed use limited to: Texas A M University. Downloaded on December 29,2021 at 21:28:48 UTC from IEEE Xplore. Restrictions apply.

By definitions (A-23) and (A-24) the following relation holds:

$$V(\tilde{y}) \subseteq V(y_c) \tag{A-27}$$

and by (A-25)–(A-27)

$$T(\tilde{y}) \subseteq T(y_c). \tag{A-28}$$

Then

$$\sup_{x \in T(\tilde{y})} |Sx - A\tilde{y}| \leqslant \sup_{x \in T(y_c(\tilde{y}))} |Sx - A\tilde{y}| \tag{A-29}$$

and using definition (6) and Lemma 2

$$E(A, \epsilon) = \sup_{\tilde{y} \in Y} \sup_{x \in T(\tilde{y})} |Sx - A\tilde{y}| \leqslant \sup_{\tilde{y} \in Y} \sup_{x \in T(y_c(\tilde{y}))} |Sx - A\tilde{y}|. \tag{A-30}$$

Consider the algorithm A^* in the form (30), then

$$A^*Ix = \sum_{i=1}^{n} D_{a_i}(\bar{I}x)_{a_i} = \sum_{i=1}^{n} (S\bar{I}^{-1})_{a_i}(\bar{I}x)_{a_i} = S\bar{I}^{-1}(\bar{I}x) \tag{A-31}$$

and using (29)

$$A^*Ix = S\bar{I}^{-1}\bar{I}x = Sx. \tag{A-32}$$

Thus, if the algorithm A^* is in the form (30), then

$$|Sx - A^*\tilde{y}| = |Sx - A^*Ix - A^*\rho| = |A^*\rho|. \tag{A-33}$$

Let us define the following set:

$$Y_c = \{y_c = y_c(\tilde{y}) : \tilde{y} \in Y\}. \tag{A-34}$$

Then

$$\sup_{\tilde{y} \in Y} \sup_{x \in T(y_c(\tilde{y}))} |Sx - A^*\tilde{y}| \geq \sup_{y_c \in Y_c} \sup_{x \in T(y_c)} |Sx - A^*y_c| \tag{A-35}$$

and

$$E(A^*, \epsilon) \geq \sup_{y \in Y_c} \sup_{x \in T(y)} |Sx - A^*y|. \tag{A-36}$$

Since $Y_c \subseteq R(I) \subseteq Y$ it follows that:

$$\sup_{y \in R(I)} \sup_{x \in T(y)} |Sx - A^*y| \leqslant \sup_{y \in Y} \sup_{x \in T(y)} |Sx - A^*y| = E(A^*, \epsilon). \tag{A-37}$$

Then

$$E(A^*, \epsilon) \geq \sup_{y \in R(I)} \sup_{x \in T(y)} |Sx - A^*y|. \tag{A-38}$$

Let us define the restricted sets $\bar{V}(x)$ and $\bar{T}(\tilde{y})$

$$\bar{V}(x) = \{\tilde{y} \in R(\bar{I}) : |(\bar{I}x - \tilde{y})_i| \leqslant \epsilon_{a_i}, \quad i = 1, \cdots, n\} \tag{A-39}$$

$$\bar{T}(\tilde{y}) = \{x \in X : |(\bar{I}x - \tilde{y})_i| \leqslant \epsilon_{a_i}, \quad i = 1, \cdots, n\} \tag{A-40}$$

where $R(\bar{I})$ is the range of the restricted operator $\bar{I}$.

Using the definition of active constraints and (A-31)

$$\sup_{y \in V(x)} |Sx - A^*y| = \sup_{\tilde{y} \in \bar{V}(x)} |Sx - S\bar{I}^{-1}\tilde{y}| \tag{A-41}$$

and

$$\sup_{x \in X} \sup_{y \in V(x)} |Sx - A^*y| = \sup_{x \in X} \sup_{\tilde{y} \in \bar{V}(x)} |Sx - S\bar{I}^{-1}\tilde{y}|. \tag{A-42}$$

We define the Cartesian product $X \cdot R(\bar{I})$ of X and $R(\bar{I})$ to be the set of pairs of vectors $(x, \tilde{y})$ with x in X and $\tilde{y}$ in $R(\bar{I})$.

Let us observe that

$$\begin{aligned}\{(\tilde{y}, x) \in R(\bar{I}) \cdot \bar{T}(\tilde{y})\} &= \{(\tilde{y}, x) \in R(\bar{I}) \cdot X : |(\bar{I}x - \tilde{y})_i| \\ &\qquad \leqslant \epsilon_{a_i}, \ i = 1, \cdots, n\} \\ &= \{(x, \tilde{y}) \in X \cdot \bar{V}(x)\}.\end{aligned} \tag{A-43}$$

Thus,

$$\begin{aligned}&\sup_{\tilde{y} \in R(\bar{I})} \sup_{x \in \bar{T}(\tilde{y})} |Sx - S\bar{I}^{-1}\tilde{y}| \\ &= \sup_{(x, \tilde{y}) \in R(\bar{I}) \cdot \bar{T}(\tilde{y})} |Sx - S\bar{I}^{-1}\tilde{y}| \\ &= \sup_{(x, \tilde{y}) \in X \cdot \bar{V}(x)} |Sx - S\bar{I}^{-1}\tilde{y}| \\ &= \sup_{x \in X} \sup_{\tilde{y} \in \bar{V}(x)} |Sx - S\bar{I}^{-1}\tilde{y}| \leq E(A^*, \epsilon).\end{aligned} \tag{A-44}$$

Let us introduce $\bar{\rho}$ such that

$$\bar{\rho} = \tilde{y} - \bar{I}x \tag{A-45}$$

then

$$\sup_{x \in \bar{T}(\tilde{y})} |Sx - S\bar{I}^{-1}\tilde{y}| = \sup_{\substack{|\rho_i| \leqslant \epsilon_{a_i} \\ i = 1, \cdots, n}} |S\bar{I}^{-1}\bar{\rho}| = \epsilon |S\bar{I}^{-1}| \quad \forall \tilde{y} \in R(\bar{I}) \tag{A-46}$$

$$E(A^*, \epsilon) \geq \sup_{\tilde{y} \in R(\bar{I})} \epsilon |S\bar{I}^{-1}| = \epsilon |S\bar{I}^{-1}| = \sup_{x \in \bar{T}(\tilde{y})} |Sx - S\bar{I}^{-1}\tilde{y}|. \tag{A-47}$$

By defining

$$x^* = x - \bar{I}^{-1}\tilde{y} \tag{A-48}$$

then using the definition of active constraints

$$E(A^*, \epsilon) = \sup_{x^* \in \bar{T}(0)} |Sx^*| = \sup_{x \in T(0)} |Sx|. \tag{A-49}$$

From (7) and (A-49) it follows that:

$$E(\epsilon) \leqslant E(A^*, \epsilon) = e(\epsilon). \tag{A-50}$$

Using the reverse inequality (15), we obtain

$$E(\epsilon) = E(A^*, \epsilon) = e(\epsilon) \tag{A-51}$$

which implies that the algorithm A^* is an optimal error algorithm.

According to (A-49) and (A-51) the intrinsic error is given by

$$E(\epsilon) = \sup_{x \in T(0)} |Sx|. \tag{A-52}$$

Since $T(0)$ is a balanced set and S is a linear functional

$$E(\epsilon) = \sup_{x \in T(0)} Sx \tag{A-53}$$

the theorem is proved.

References

[1] J. F. Traub and H. Wozniakowski, *A General Theory of Optimal Algorithms.* New York: Academic, 1980.

[2] C. A. Micchelli and T. J. Rivlin, "A survey of optimal recovery," in *Optimal Estimation in Approximation Theory,* C. A. Micchelli and T. J. Rivlin, Eds. New York: Plenum, 1977, pp. 1–54.

[3] A. G. Marchuk and K. Yu. Oshipenko, "Best approximation of functions specified with an error at a finite number of points (in

Authorized licensed use limited to: Texas A M University. Downloaded on December 29,2021 at 21:28:48 UTC from IEEE Xplore. Restrictions apply.

Russian), *Mat. Zametki,* vol. 17, pp. 359–368, 1975. (English Transl., *Math. Notes,* vol. 17, pp. 207–212, 1975).
[4] F. C. Schweppe, *Uncertain Dynamic Systems.* Englewood Cliffs, NJ: Prentice-Hall, 1973.
[5] H. S. Witsenhausen, "Sets of possible states of linear systems given perturbed observations," *IEEE Trans. Automat. Contr.,* vol. AC-13, pp. 556–558, 1968.
[6] F. C. Schweppe, "Recursive state estimation: Unknown but bounded errors and system inputs," *IEEE Trans. Automat. Contr.,* vol. AC-13, pp. 22–28, 1968.
[7] D. P. Bertsekas and I. B. Rhodes, "Recursive state estimation for a set-membership description of uncertainty," *IEEE Trans. Automat. Contr.,* vol. AC-16, pp. 117–128, 1971.
[8] ——, "Sufficiently informative functions and the minimax feedback control of uncertain dynamic systems," *IEEE Trans. Automat. Contr.,* vol. AC-18, pp. 117–124, 1973.
[9] B. R. Barmish and J. Sankaran, "The propagation of parametric uncertainty via politopes," *IEEE Trans. Automat. Contr.,* vol. AC-24, pp. 346–349, 1979.
[10] R. F. Brown and K. R. Godfrey, "Practical difficulties in testing identifiability of linear structural models," *IEEE Trans. Automat. Contr.,* vol. AC-23, pp. 1028–1030, 1978.
[11] M. Milanese and G. Belforte, "Estimation theory and uncertainty intervals evaluation in presence of unknown but bounded errors: Linear families of models and estimators," *IEEE Trans. Automat. Contr.,* vol. AC-27, pp. 408–414, 1982.
[12] G. Belforte and M. Milanese, "Comments on 'Practical difficulties in testing identifiability of linear structural models,' " *IEEE Trans. Automat. Contr.,* vol. AC-25, pp. 140–142, 1980.
[13] E. Fogel and Y. F. Huang, "On the value of information in system identification—Bounded noise case," *Automatica,* vol. 18, pp. 229–238, 1982.
[14] G. E. P. Box and G. M. Jenkins, *Time Series Analysis Forecasting and Control.* San Francisco, CA: Holden-Day, 1970.
[15] R. L. Kashyap and A. R. Rao, *Dynamic Stochastic Models from Empirical Data.* New York: Academic, 1976.
[16] T. Subba Rao and M. M. Gabr, "A test for the linearity of stationary time series," *J. Time Series Anal.,* vol. 1, no. 2, 1981.
[17] C. W. J. Granger and A. P. Andersen, *Introduction to Bilinear Time Series Models.* Gottingen: Vandenhoeck and Ruprecht, 1978.
[18] H. Tong and K. S. Lim, "Threshold autoregression, limit cycles and cyclical data," *J. Roy. Statis. Soc. B,* vol. 42, pp. 245–292, 1980.
[19] J. F. Traub, G. Wasilkowski, and H. Wozniakowski, *Information, Uncertainty, Complexity.* Reading, MA: Addison-Wesley, 1983.
[20] S. A. Smolyak, "On optimal restoration of functions and functionals of them" (in Russian), Candidate dissertation, Moscov State Univ., 1965.
[21] A. A. Melkman and C. A. Micchelli, "Optimal estimation of linear operators in Hilbert spaces from innacurate data," *SIAM J. Numer. Anal.,* vol. 16, pp. 87–105, 1979.
[22] P. Eykoff, *System Identification—Parameter and State Estimation.* New York: Wiley, 1974.
[23] M. Kendall and A. Stuart, *The Advanced Theory of Statistics, vol. I, II and III.* London: Griffin, 1977.
[24] R. Bellman and K. J. Astrom, "On structural identifiability," *Math. Biosci.,* vol. 7, pp. 329–339, 1970.
[25] G. Belforte and M. Milanese, "Uncertainty intervals evaluation in presence of unknown but bounded errors. Non linear families of models." in *Proc. Int. Symp. Modelling, Identification Contr.,* Davos, Switzerland, 1981.
[26] R. Genesio and M. Milanese, "Methods for the selection of approximating classes of models," in *Proc. 5th IFAC Symp. Identification.* Darmstadt: Pergamon, 1979.
[27] R. Genesio, M. Milanese, R. Tempo, and A. Vicino, "Optimal error and GMDH predictors: A comparison with some statistical techniques on two classical time series," in *Proc. 4th Int. Symp. Forecasting,* London, England, 1984; Also in Rep. Dipartimento di Automatica e Informatica, Politecnico di Torino.
[28] M. Milanese, R. Tempo, and A. Vicino, 'Robust time series prediction by optimal algorithms theory," in *Proc. 23rd IEEE Conf. Decision Contr.,* Las Vegas, NV, 1984.
[29] M. Waldmeier, *The Sunspot Activity in the Years 1610–1960,* Zurich: Schultess, 1961; Also in Swiss Federal Observatory, Zurich.
[30] S. Karlin, *Mathematical Methods and Theory in Games, Programming and Economics, vol. I and II.* Reading, MA: Addison-Wesley, 1959.

Mario Milanese was born in Alessandria, Italy, on September 11, 1942. He received the Laurea Degree in electronic engineering from the Politecnico di Torino, Torino, Italy, in 1967.

From 1968 to 1980 he was Assistant Professor at the Politecnico di Torino and from 1972 to 1981, Associate Professor of System Theory at the University of Turin. Since 1980 he has been Full Professor of System Theory at the Politecnico di Torino, where since 1982 he has been Chairman of the Dipartimento di Automatica e Informatica. His research interests include modeling, identification and approximation of complex uncertain systems, forecasting, and decision support systems.

Dr. Milanese is a member of GRIS (Gruppo Ricercatori di Informatica e Sistemistica) and of GNB (Gruppo Nazionale di Bioingegneria).

Roberto Tempo was born in Cuorgnè, Italy, on April 10, 1956. He received the Laurea Degree in electronic engineering from the Politecnico di Torino, Torino, Italy, in December 1980.

From 1981 to 1983 he was with the Dipartimento di Automatica e Informatica, Politecnico di Torino. In 1984 he joined the Centro Elaborazione. Numerale dei Segnali of the Consiglio Nazionale delle Ricerche of Italy. His main fields of research include estimation, system identification, and time series analysis.

Dr. Tempo is a member of GRIS (Gruppo Ricercatori di Informatica e Sistemistica) and of GNB (Gruppo Nazionale di Bioingegneria).

Authorized licensed use limited to: Texas A M University. Downloaded on December 29,2021 at 21:28:48 UTC from IEEE Xplore. Restrictions apply.